Dimensions 外形尺寸图

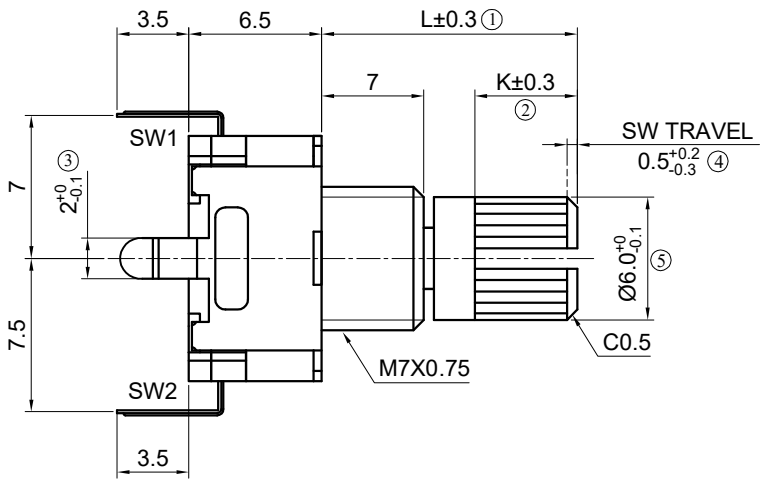

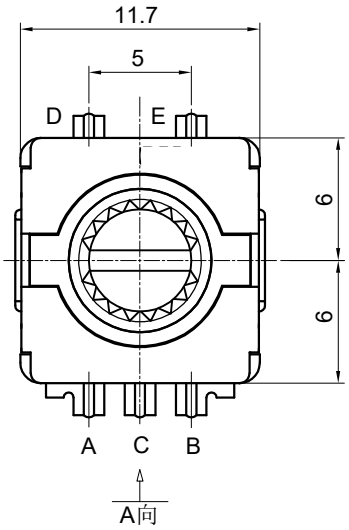

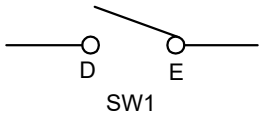

按压开关电路 Push Switch Circuit

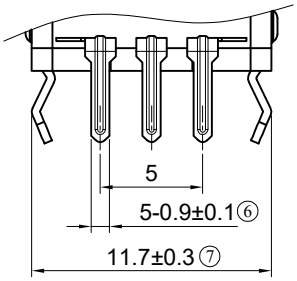

A 向

Y	15P30	20P20	20A20	20P00

脉冲和定位 Pulse And Detent

齿形轴 K-TYPE

X	L	K
15K6.5	15	6.5
18K9.5	18	9.5
20K11.5	20	11.5

轴心规格 Shaft Type

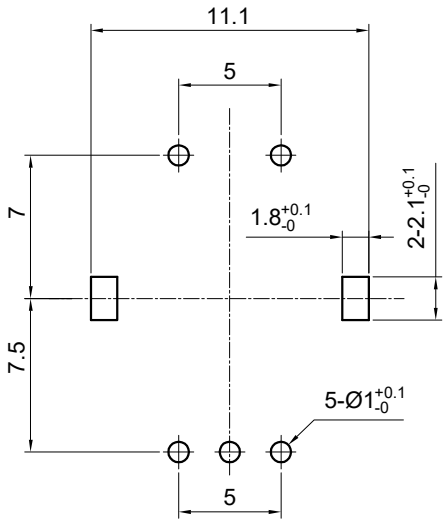

安装孔尺寸
Mounting Hole Dimensions

注：重点管控尺寸 ①- ⑦

		TOLERANCE		Product Name: 11mm Encoder Series 11型编码器系列			
		less than 10±0.3 above 10-30±0.5 above 30-100±1 all angle ± 5°		PART No. : EC1121D-H01-XXX		SPEC : SE Y B X	
Mark	Content of change	APPD	DATE	DWG No. : B-EC112-07		Designed	Checked	Approved
				SCALE	Free	工程部 2018-11-07 邹小强	工程部 2018-11-07 李厚健	工程部 2018-11-07 蔡春贤
				UNIT	mm			
				FIG.1(1)				

EC11 SERIES SPECIFICATION EC11系列规格书

1. 一般事项 General

1-1. 适用规格 Scope

本规格适用于微小电流回路的电子设备,属11型回转编码器.

This specification applies to 11 mm size low-profile rotary encoder (incremental type) for microscopic current circuits ,used in electronic equipment.

1-2. 标准状态 Standard atmospheric conditions

除另有规定外,测量应在以下状态下进行:

Unless otherwise specified , the standard range of atmospheric conditions for making measurements and test is as following limits:

温 度 Ambient temperature : 15℃ to 35℃

相对湿度 Relative humidity : 25% to 85%

气 压 Air pressure :86kpa to 106kpa

1-3. 使用温度范围

Operating temperature range :-40℃ to 85℃

1-4. 保存温度范围

Storage temperature range : -40℃ to+90 ℃

2. 构造 Construction

2-1. 尺寸 Dimensions

见所附成品图Refer to attached drawing

图1 (Fig 1)

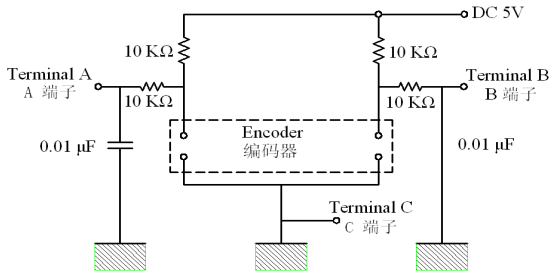

3. 额定值 Rating

3-1. 额定电压

Rated voltage :DC 5V

3-2. 最大额定电流(阻抗负载)

Maximum operating current (resistive load)

各相导线 Each lead : 0.5mA;(Max 5mA;MIN 0.5mA)

公共导线 Common lead : lmA(MAX 10mA; MIN 0.5mA)

4. Application Nots 使用上的事项

4-1. 避免储藏于高温、潮湿及腐蚀的场所.产品购入后尽可能在6个月内使用完.拆包装后未使用完的剩余 产品需储藏于防潮防毒的环境下.

Avoid storing the products in a place at high temperature, high humidity and in Corrosive gases. Please use this product as soon as possible with 6 months limitation.lf any remainder left after packing is opened, please store it with proper moistureproofing , gasproofing etc.

4-2. 编码器信号的计算方法应将操作的速度,信号的取样时间及电子回路中的微电脑软体等考虑进去.

The encoder pulses count method should be designed with taking operating speed, sampling time and design of the microcomputer software into cosideration.

4-3. 此产品在定位点的输出阻抗波形参照(5-1),因此在设计软体时请留意其状态.

With this products the detent position output consnlt fig.5-1. Therefore make the A phase the reference at the soft ware design stage.

4-4. 在设计时要考虑到杂讯,建议使用C/R滤波电路,(图1)

At design of the pulse count process .Using the C/R filter circuit is Recommended.(fig .1)

4-5. 本产品请勿碰触到水,可能会导致输出波形的异常.

Care must be taken not to expose this product to water or dew to prevent possible problem in pluses output waveform

5.电气性能 ELECTRCAL CHARACTERISTICS

项目 ITEM	条件 CONDITIONS		规格 SPECICATIONS
5-1.输出信号 Output signal format	A、B两信号输出相位差，输出波形详细见（图2/3）（虚线表示带卡点装置的上擎子处位置） 2 phase different signals (signal A, signal B) Details shown in <fig.2/3> (the broken line shows detent position.)		
	轴回转方向 Shaft rotati-onal direction	信号 Signal	输出波形 Output 图 2 fig. 2　　图 3 fig. 3
	顺时针方向 C.W	（A-C端子间）A(Terminal A-C) B（B-C端子间）B(Terminal B-C)	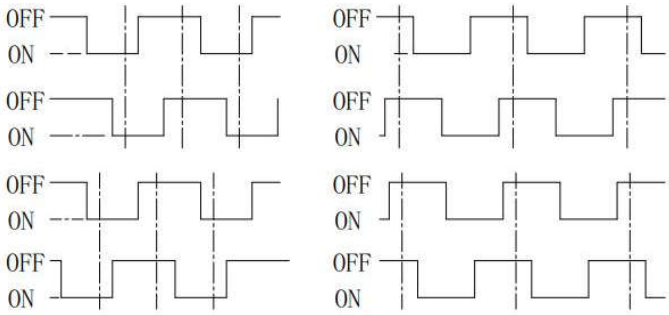
	逆时针方向 C.C.W	A（A-C端子间）A(Terminal A-C) B（B-C端子间）B(Terminal B-C)	
5-2. 分解能力 Resolution	回转360°的输出脉冲数. Number of pulses in 360° rotation.		□15个脉冲/360°(图2) 15Pulsrs/360°(fig2)for each phase ■20个脉冲/360°(图3) 20Pulsrs/360°(fig3)for each phase
5-3.开关特性 Switching characteristics	下(图4)所示回路,轴以360°/sec 的速度转动测定。 Measurement shall be made under the condition as follows . Shaft rotational speed : 360° /S　Test circuit : (fig .4) 图4 <fig .4> 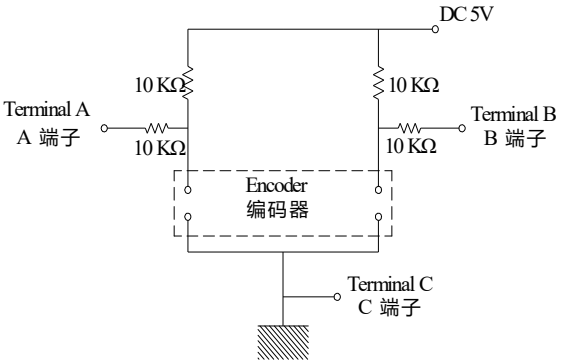 图5 <fig .5> 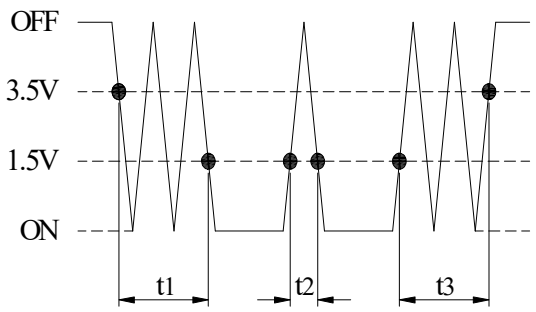 (注) 编码 OFF 指输出电压3.5V以上的状态(fig.5). Code-OFF area :The area which the voltage is 3.5Vor more(fig.5) . 编码 ON 指输出电压1.5V以下的状态(fig.5). Code ON area :The area which the voltage is 3.5Vor more(fig.5) .		
5-3-1.振荡 Chattering	编码从OFF→ON或ON→OFF时,输出1.5V~3.5V的通过时间应符合规定. Specified by the signal ' spassage time from 1.5V to 3.5V of each switching position (code OFF~ON or ON ~OFF)		t1, t3≤3ms
5-3-2.滑动杂音（突跳） Sliding noise（Bounce）	编码 ON 部份的1.5V以上的电压变动时间在振荡t1, t3之间会产生1ms以上,1.5V以下的 ON 部份.另外,如果各突跳间1.5V以下的范围在1ms以上时,则判定为另一个突跳. Specified by the time of voltage change exceed 1.5V in code-ON area.when t bounce has code -ON time less than lms between chattering (t1 or t3).the voltage change shall be regarded as a part of chattering.when the code-ON time between 2 bounces is less than lms .they are regarded as 1 linked bounc		t2≤2ms
5-3-3.滑动噪音 Sliding noise	编码OFF部份的电压变动。 The voltage change in code-OFF area.		3.5 V 以上 3.5 V min

5.电气性能 ELECTRAL CHARACTERISTICS		
项目 ITEM	条件 CONDITIONS	规格 SPECIFICATIONS
5-4. 相差 Phase difference	下(图6)所示回路,轴以360°/S的速度转动测定。 Measurement shall be made under the condition which the shaft is rotated at 60r /min 图6 fig . 6 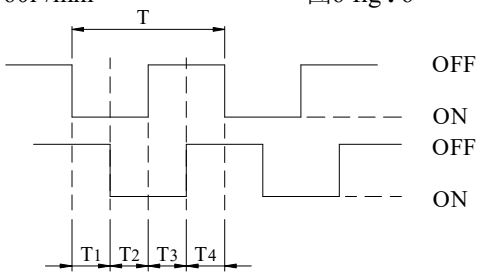	T1、T2、T3、T4≥4mS 见图6（fig. 6）
5-5. 绝缘阻抗 Insulation resistance	在端子和轴间施加电压 250V DC。 Measurement shall be made under the condition which a voltage of 250V DC is applied between individual terminals and bushing .	100MΩ 以上 100MΩ Min
5-6. 耐电压 Dielectric strength	在端子和轴间施加 AC 300 V电压1分钟。 A voltage of 300V AC shall be applied for l minute between individual terminals and bushing.	不得有绝缘破坏 Without arcing or breakdown
5-7.端子间接触阻抗 Contact resistance	出力信号处于 ON 时安定状态条件下测定. Measurement shall be stalbe condition which a output signal is ON.	1Ω以下 1ΩMax
6. 机械性能 Mechanical characteristics		
6-1. 全回转角度 Total rotational angle		360°(无止档点) 360°(End less)
6-2. 定位点力矩 Deten torque	只适用于附卡点装置 Onlt suitable for C.C,equipment.	2~15mN.m.(20～150gf.cm)
6-3. 定位点数及位置 Number of detent and position	只适用于附卡点装置 Onlt suitable for C.C,equipment.	□30点定位(间隔角度12°±2° 30detents (Step angle :12°±2°) ■20点定位(间隔角度18°±2° 20detents (Step angle :18°±2°)
6-4. 轴的推拉强度 Push -pull strength of shaft	在轴端,沿轴向施加8Kg 的静负荷力推和拉各10秒钟 (产品焊锡固定在PCB上。） Push and pull static load of 8kg shall be applied to be shaft in the axial direction for 10s. (After soldering of the PC board)	轴无破损,回转无异常,电气性能无异常。 Without damage or excessive play in shaft. NO excessive abnormality in rotational feeling .And.electrical characteristics and be satisfied.
6-5. 轴摆动 Shaft wobble	在轴前端5mm处，沿径向瞬间施加 50mN.m (500gf.cm)的力. A momentary load of 50mN.m (500gf .cm) shall be applied at the point 5mm from the tip of the shaft in a direction perpendicular to the axis of shaft.	0.8xL/30mm p-p以下(L:指安装平面到轴的柄端的的距离） 0.8xl/30mm p-p Max或(l:Distance between mounting surface and measuring point on the shaft)
6-6.轴的回转方向摆动 Shaft play in rotational wobble	用角度板测定. Testing by angle board.	5° 以下 5°MAX

7. 耐久性能 ENDURANCE CHARACTERISTICS		
项目 ITEM	条件 CONDITIONS	规格 SPECIFICATIONS
7-1.回转寿命 .Rotational life	在无负荷条件下轴以600～1000周/小时速度回转， 一日连续5000～8000次. The shaft of encoder shall be rotated at a speed of 600～1000cycles/H without electrical load,after with measurements shall be made. (5000 to 8000 continuous cycles for 24 hours.)	■在力矩≤100gf.cm时30, 000±200周 30,000±200cycles per below 100gf.cm. □在力矩＞100gf.cm时15,000±200周. 15,000±200cycles per above 100gf.cm. 振荡 t1, t3≤5mS. 突跳 t2≤3mS. 尚余有轻微定位感. 端子间接触阻抗200Ω以下Chattiring t1,t3≤5mS.Bounce t2≤3mS.Detent feeling has to remainsContact resistance 200ΩMax
7-2. 耐湿性 Damp heat	温度40±2℃,湿度90～95%的恒温恒湿湿槽中放置96 ±4小时后,在常温、常湿中放置1.5小时后测试. The encoder shall be stored at temperature of 40±2℃ with relative humidity of 90% to 95% for 96 ±4H in a thermostatic chamber.And the encoder shall be subjected to standard atmospheric conditions for 1.5H,After which measurements shall be made.	所有项应满足初期规格 Specifications in clause all items is shall be satisfied .
7-3.耐热性 Dry heat	温度85±3℃的恒温箱中放置96 ±4小时,然后在常温、常湿放置1.5小时后测试. The encoder shall be stored at a temperature of 85±3℃ for 96 ±4H in a thermostatic chamber.And the encoder shall be subjected to standard atmospheric conditions for 1.5H, After which measurements shall be made.	所有项应满足初期规格 Specifications in clause all items is shall be satisfied .
7-4.低温特性 Cold	温度-40±3℃的恒温箱中放置96 ±4小时,常温、常湿放置1.5小时后测试. The encoder shall be stored at a temperature of -40±3℃ for 96 ±4H in a thermostatic chamber.And then the encoder shall be subjected to standard atmospheric conditions for 1.5H. After which measurements shall be made.	所有项应满足初期规格 Specications in clause all items is shall be satisfied .
7-5.盐雾试验 Salt atnospheres	1.试件在下述实验后测量： (1)温度：35±2℃； (2)盐溶溶剂化物 浓度：5±1%（质量百分比）； (3)盐沉积物用水冲掉； (4)时间：☑8小时 □12小时 □24小时 □48小时 2.观查测量之前，应把样品浸泡在温度低于37.8℃的水中，用冲软毛刷清洗盐沉积物。 3.在室温为33.9℃到36.1℃之间的室内测量，且PH值应保持在6.5到7.2之间。 1.The encoder shall be checked after the following test: (1)Temperature:35±2℃; (2)Salt Solution:5±1%(Solids by mass) (3)Salt deposit shall be removed by running water. (4)Duration Time: ☑8 hours □12 hours □24 hours □48hours 2.Prior to examination and measurements,the devices shall be prepared in the following manner; Salt deposits shall be removed by a gentle wash or dip in water not warmer that 37.8 ℃(100°F)and a light brushing using a soft hair or plastic bristle brush. 3.The PH shall be maintained between 6.5 and 7.2 when measured at a temperature between 33.9℃ and 36.9℃	金属部分无明显腐蚀现象 （切口除外） There is no obvious corrosion on the metal part (except the cut).
7-6.焊锡性 Solder ability	■ 手工焊接 Contact rofce : 300℃ max. 3S max. □ 回流焊 Reflow soldering : 260℃ max. 3S max. □ 浸焊 Dip soldering : 260±5℃ 5±1s	浸渍面须有75%以上焊锡附着 A new uniform coating of solder shall cover75% minimum of the surface being immersed.

7. 耐久性能 ENDURANCE CHARACTERISTICS		
7-7.耐焊接热 Resistance to Soldering heat	1.手工焊接:温度300℃以下,时间3秒以内. 2.槽焊:使用基板 t=1.6mm的单面覆铜板. a.预热:基板表面温度100℃以下,时间1分钟以内. b.焊接:温度260±5℃或以下,时间3秒以内. 1.Manual soldering:Bit temperature of soldering iron:300℃Cless than Application time of soldering iron:within 3s. 2.Dip soldering:Dip soldering:Printed wiring board:single-sided copper clad laminate board with thickness of 1.6mm.. a.preheating time :Surface temperature of board :100℃ or less. within 1 min. b.Solder :temperature 260±5℃ or less,Immersion time :within 3s	不得有绝缘体的破坏、变形、接触无异常. Electrical characteristics shall be satisfied No mechanical abnormality.

推动开关部分Push Switch Portion

备注:以下规格适用于EC11编码带开关系列.
No: The following specification is only suitable for the one type wih switch construction of EC11 encoder series.

1. 额定值Rating
1-1.额定电压 Rated voltage :DC 5V 1-2. 最大额定电流(阻抗负载) Maximum operating current (resistive load):10mA MAX

2. 电气性能 ELECTRICAL CHARACTERISTICS		
项目 ITEM	条件 CONDITIONS	规格 SPECIFICATIONS
2-1.接触电阻 Contact resistance	用 DC 5V 1mA 电压测定. Voltage test at DC 5V 1mA.	≤100mΩ
2-2.绝缘阻抗 Insulation resistance	在端子和安装板间施加电压250V DC. Measurement shall be made under the condition which a voltage of 250V DC is applied between individual terminals and bushing and bushing and plank	100MΩ Min
2-3. 振荡 Bouncing	以1秒钟1往返(OFF-ON-OFF)按压动作. Shaft shall be push at l cycles/s (OFF-ON-OFF)	≤10ms
2-4. 耐电压 Dielectric strength	在端子和安装板间施加AC300V电压1分钟 A voltage of 300V Acshall be applied for l minute between individual terminals and bushing and plank.	不得有绝缘破坏 Without arcing or breakdown
3 机械性能 Mechanical characteristics		
3-1.开关电路.接点数 Switch circuit and number of pulse	/	单极单投(按压ON) Single pole and single throw (push ON)
3-2.开关动作力 Operation fore of switch	在轴端,沿轴向施加的按压力. Push static load to the shaft in the axial direction.	500±200gf.cm
3-3.开关动移动量 Travel of switch	/	0.5±0.3mm
4 耐久性能 Endurance Characteristics		
4-1.按压寿命 Push-life	The shaft of encoder shall be push to 20,000 cycles at a speed of 600 cycles/H without electrical load ,after with measurements shall be made.	接触电阻:≤200mΩ. 其它应满足初期规格. Contact resistance : 200mΩor less Specifi cation in clause shall be satisfied.

制定日期	2018/11/7	DSG.承办	CHKD.审核	APPD.批准	T I T L E 标题:
版本号: 00	变更记录	Alan Lee	工程部 2018-11-07 李厚健	工程部 2018-11-07 蔡春贤	ENCODER 编码器
					DOCUMENT No.文号:
					SY-RD-03-003